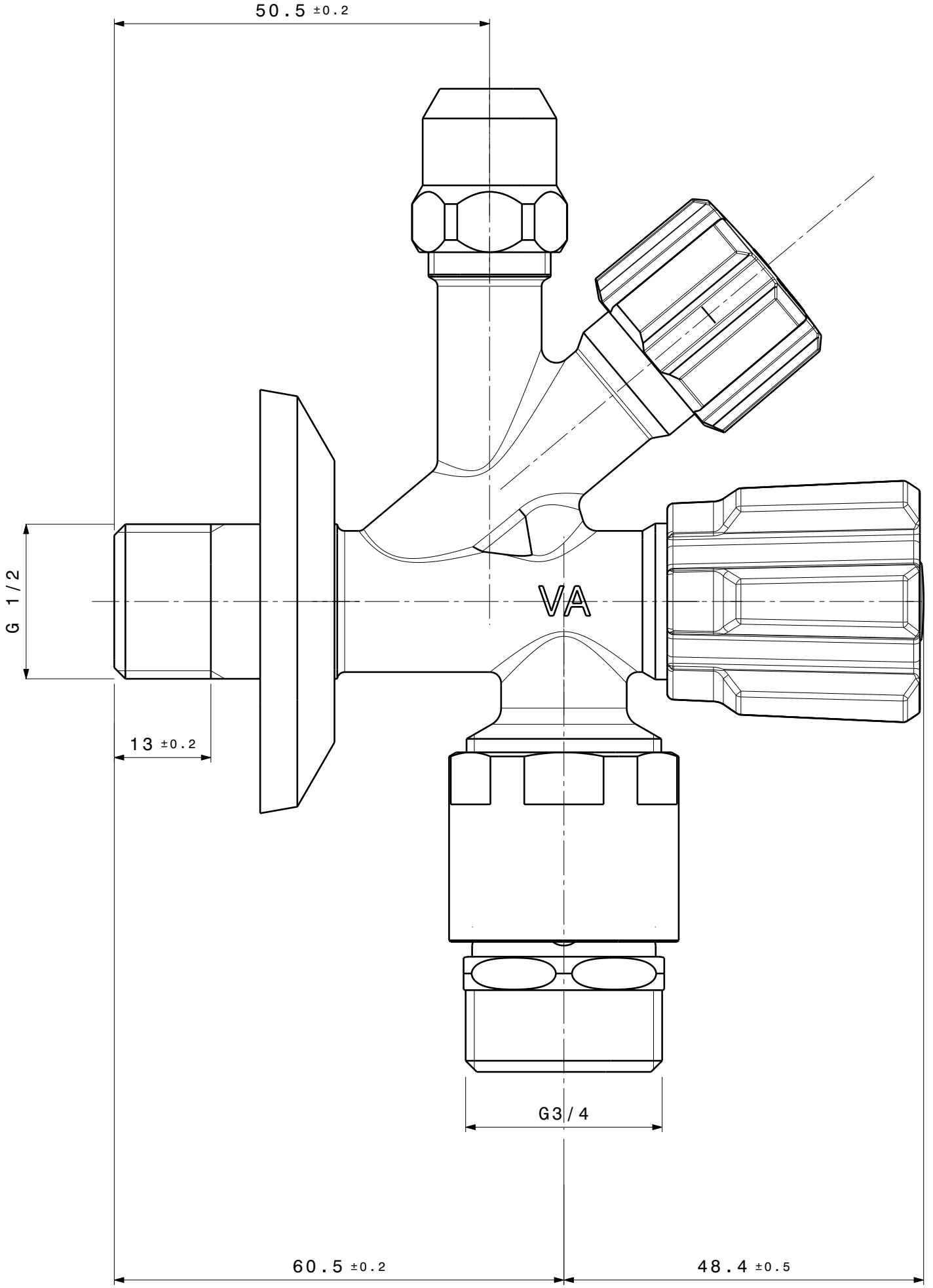
50.5 ±0.2
G 1/2
13 ±0.2
VA
G3/4
60.5 ±0.2
48.4 ±0.5